US012003089B2

(12) **United States Patent**
Twigg et al.

(10) **Patent No.: US 12,003,089 B2**
(45) **Date of Patent: Jun. 4, 2024**

(54) **SHORT TO GROUND PROTECTION AND AUTOMATIC RECOVERY**

(71) Applicant: **Microchip Technology Incorporated**, Chandler, AZ (US)

(72) Inventors: **Christopher Twigg**, Endwell, NY (US); **Zbigniew Lata**, Plano, TX (US); **Fernando Gonzalez**, Chandler, AZ (US)

(73) Assignee: **Microchip Technology Incorporated**, Chandler, AZ (US)

(*) Notice: Subject to any disclaimer, the term of this patent is extended or adjusted under 35 U.S.C. 154(b) by 0 days.

(21) Appl. No.: **17/517,782**

(22) Filed: **Nov. 3, 2021**

(65) **Prior Publication Data**

US 2022/0140595 A1 May 5, 2022

Related U.S. Application Data

(60) Provisional application No. 63/110,239, filed on Nov. 5, 2020.

(51) **Int. Cl.**

H02H 9/00	(2006.01)
H02H 1/00	(2006.01)
H02H 3/06	(2006.01)
H02H 3/08	(2006.01)

(52) **U.S. Cl.**
CPC ***H02H 3/08*** (2013.01); ***H02H 1/0007*** (2013.01); ***H02H 3/06*** (2013.01)

(58) **Field of Classification Search**
CPC H02H 3/06; H02H 3/08; H02H 1/0007
USPC 361/54
See application file for complete search history.

(56) **References Cited**

U.S. PATENT DOCUMENTS

4,977,477	A	12/1990	Babico et al.	361/98
5,491,601	A	2/1996	Arntz et al.	361/79
5,581,433	A *	12/1996	Jordan	H03K 17/0822 361/87
5,793,596	A *	8/1998	Jordan	H03K 17/0822 361/18
11,205,894	B1 *	12/2021	Scheel	H02H 7/20
2010/0007216	A1 *	1/2010	Chojecki	H03K 17/0822 307/115
2010/0097126	A1 *	4/2010	Yamazaki	H03L 7/0895 327/536

FOREIGN PATENT DOCUMENTS

CN	105514932 B	4/2016	H02H 3/06

OTHER PUBLICATIONS

International Search Report and Written Opinion, Application No. PCT/US2021/057975, 12 pages, dated Feb. 28, 2022.

* cited by examiner

Primary Examiner — Jared Fureman
Assistant Examiner — Lucy M Thomas
(74) *Attorney, Agent, or Firm* — SLAYDEN GRUBERT BEARD PLLC

(57) **ABSTRACT**

An apparatus includes a single sense pin connected to a line of a device connected to the apparatus, a gate pin configured to produce a gate signal to enable or disable a switch connected between the line of the device connected to the apparatus and a system ground, and control logic. The control logic is configured to at the single sense pin, determine a short between the device and the system ground, and, based upon the determination of the short, disable the switch.
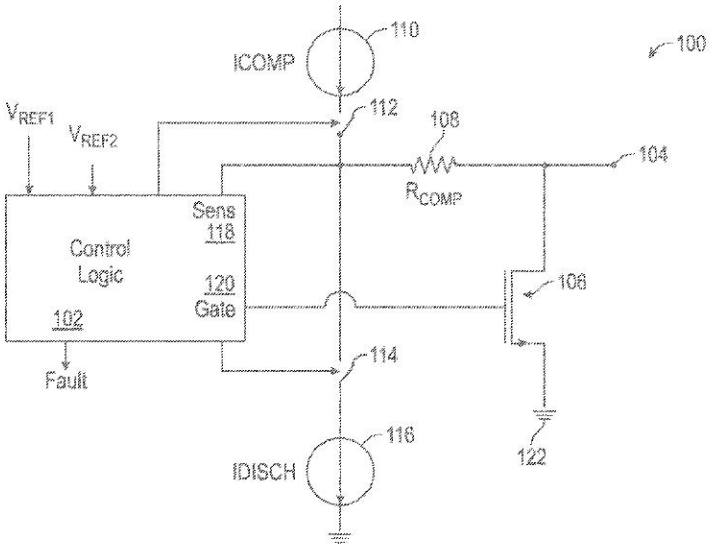
17 Claims, 5 Drawing Sheets